LEE BROOM

LENS FLAIR TABLE LAMP

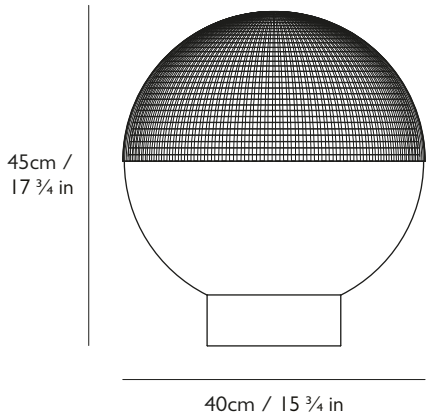

PRODUCT DETAILS

Name

Lens Flair Table Lamp

Finish & Product Code		110-130v	220-240v
Matte Black	●	LEN0121	LEN0021
Brushed Brass	●	LEN0120	LEN0020

Materials

Steel, transparent polycarbonate

Illumination 110-130v

7w, 2700k, 700 lumen

Bulb: E26, 7w LED Filament, 800 lumen, 15k hrs (1x supplied)

Illumination 220-240v

7.5w, 2700k, 700 lumen

Bulb: E27, 7.5w LED Filament, 806 lumen, 10k hrs (1x supplied)

Dimming

Dimmable. Mains voltage. TRIAC / Leading edge.

Certification

UL, cUL (110-130v)
CE, CB (220-240v)

Year of Design

2018

Dimensions

H 45cm x Dia 40cm / H 17 ¾ in x Dia 15 ¾ in

Suspension

Length: 200cm / 78 ¾ in

with in-line dimmer switch

Black or gold fabric outer

Base

H 7cm x Dia 18.4cm / H 2 ¾ in x Dia 7 ¼ in

Round steel in matching matte black or brushed brass finish

Weight

Product (net): 5.5 kg / 12.13 lbs

Boxed (gross): 6.6 kg / 14.55 lbs

0618rev02

For more information please contact:
US & Canada Inquiries: +1 212 804 8477 - 34 Greene Street, New York, NY 10013 - sales@leebroom.com
UK & Global Inquiries: +44 207 820 0742 - 95 Rivington Street, London, EC2A 3AY - info@leebroom.com
WWW.LEEBROOM.COM