JEAN - RECTANGULAR H. 74

design Studio Sovet
1998

SOVETITALIA
NEW SHAPES FOR GLASS

Tavolo con gambe in alluminio anodizzato, laccato o impiallacciato, varie finiture. Top in vetro temperato trasparente o acidato. Disponibile anche nella versione laccata, vari colori.

Dining table with legs in anodized aluminium, lacquered or wood veneered, various finishes. Tempered top in clear or frosted glass. Available also in the lacquered version, various colours.

FORME E DIMENSIONI / SHAPES AND DIMENSIONS

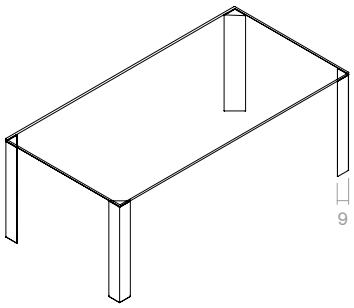

- 140x80x74h
- 160x90x74h
- 180x90x74h
- 200x100x74h

FINITURE BASE / BASE FINISHES

Alluminio anodizzato / Anodized aluminium

OA

Alluminio laccato / Lacquered aluminium

FB FC FN FV

Legno / Wood

CL NO

FINITURE TOP / TOP FINISHES

VETRO FLOAT / CLEAR GLASS

Clear TRTR	Lacquered Cat. A / C	Glass TETE/TFTF	Lacquered Cat. B / D
TRTR	TRB2	TETE	TEA1
	TRC1	TFTF	TEB1
	TRN1		TEC2
	TRN2		TER2
	TRR1		TER3
	TRMP		TEV1
	TRM1		TEM4
	TRM2		TEM5
	TRM3		TES1

ACIDATO / FROSTED

Frosted AEAE	Lacquered Cat. E
AEAE	AEA1
	AEB1
	AEC1
	AEC2

JEAN - SQUARE H. 74

design Studio Sovet
1998

SOVETITALIA
NEW SHAPES FOR GLASS

Tavolo con gambe in alluminio anodizzato, laccato o impiallacciato, varie finiture. Top in vetro temperato trasparente o acidato. Disponibile anche nella versione laccata, vari colori.

Dining table with legs in anodized aluminium, lacquered or wood veneered, various finishes. Tempered top in clear or frosted glass. Available also in the lacquered version, various colours.

FORME E DIMENSIONI / SHAPES AND DIMENSIONS

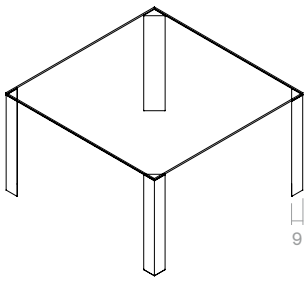

- 90x90x74h
- 110x110x74h
- 130x130x74h

FINITURE BASE / BASE FINISHES

Alluminio anodizzato / Anodized aluminium

OA

Alluminio laccato / Lacquered aluminium

FB FC FN FV

Legno / Wood

CL NO

FINITURE TOP / TOP FINISHES

VETRO FLOAT / CLEAR GLASS

Clear TRTR	Lacquered Cat. A / C	Glass TETE/TFTF	Lacquered Cat. B / D
TRTR	TRB2	TETE	TEA1
	TRC1	TFTF	TEB1
	TRN1		TEC2
	TRN2		TER2
	TRR1		TER3
	TRMP		TEV1
	TRM1		TEM4
	TRM2		TEM5
	TRM3		TES1

ACIDATO / FROSTED

Frosted AEAE	Lacquered Cat. E
AEAE	AEA1
	AEB1
	AEC1
	AEC2