lambert&fils

HUTCHISON

type:	suspension	
materials:	body:	powder coated aluminum
	lens:	PMMA
	hardware:	powder coated aluminum
	wire:	waxed cotton
wire length:	108”	
weight:	1.7 lb/ 0.8 kg (01), 3.4 lb/ 1.6 kg (02), 5.1 lb/ 2.4 kg (03), 6.8 lb/ 3.2 kg (04)	
light source:	8W (01), 16W (02), 24W (03), 32W (04)	
voltage:	120V / 277V	
dimmer:	refer to our recommended list of dimmer models	
certifications:		
notes:	– must be installed by an electrician – additional charges for modifications or for special orders – dimensions are approximate and may vary slightly – lead time 7 to 9 weeks	

Updated: April 2019

lambert&fils

HUTCHISON 01

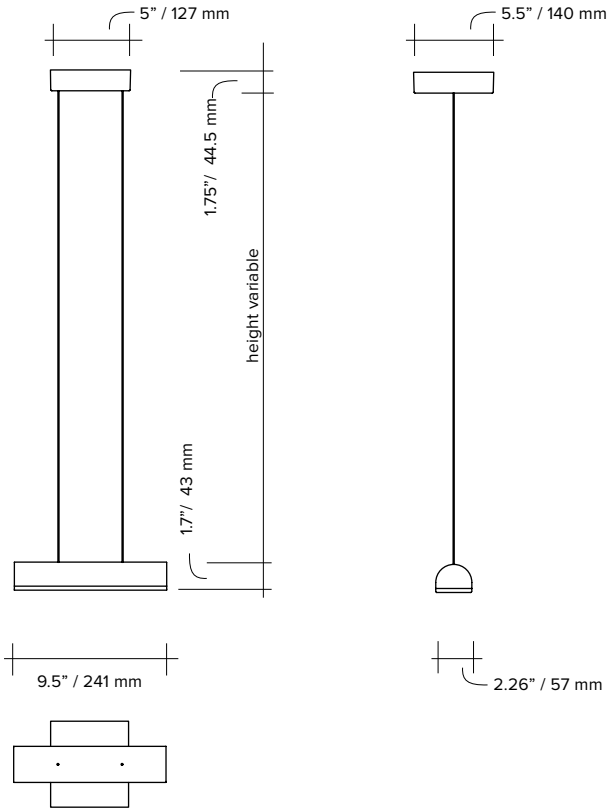

HUTCHISON 02

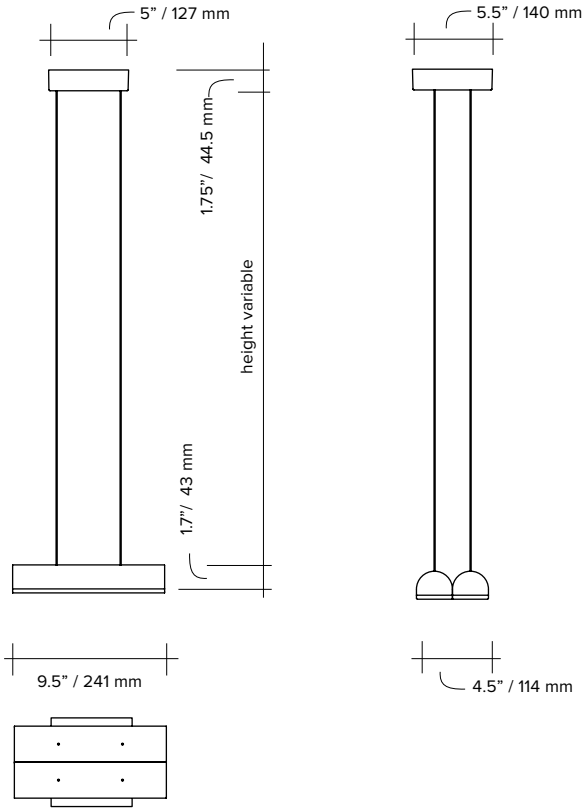

HUTCHISON 03

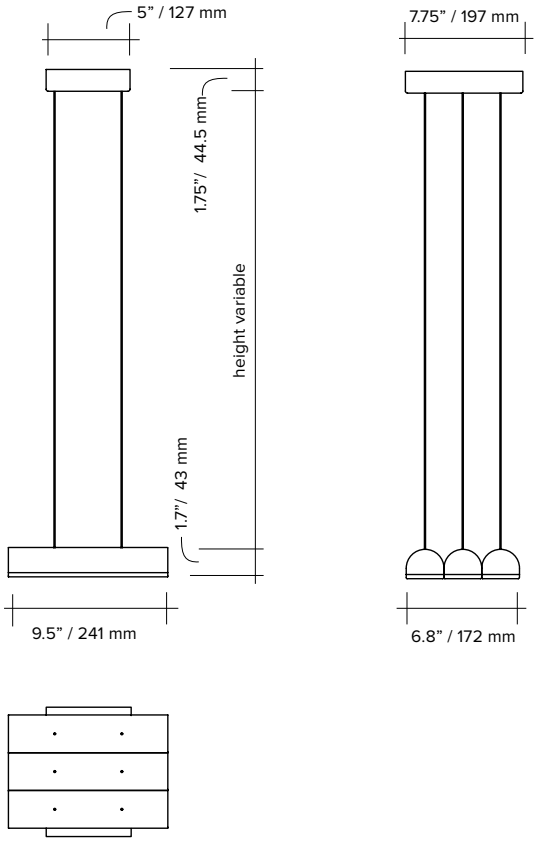

HUTCHISON 04

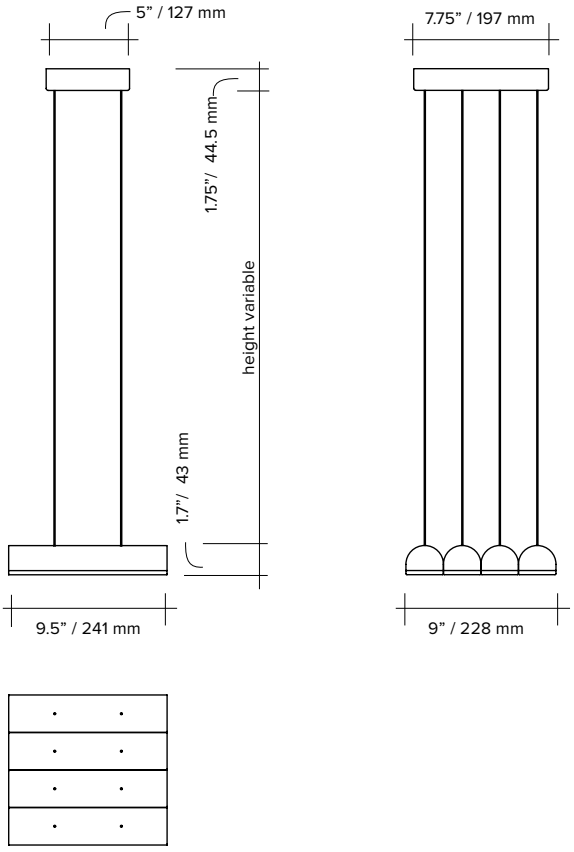

lambert&fils

ORDER GUIDE: SKU

COLLECTION	MODEL	BODY	WIRE	CANOPY
HUT hutchison	**01**	**BL** black	**BL** black	**BL** black
	02	**WH** white	**WH** white	**WH** white
	03	**TC** terracotta		**TC** terracotta
	04	**AL** aluminum		
HUT	**01**	**BL**	**BL**	**BL** = **HUT01BLBLBL**

example

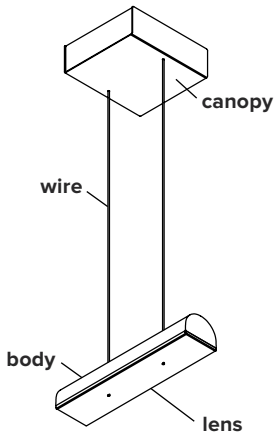

COLOUR (body)

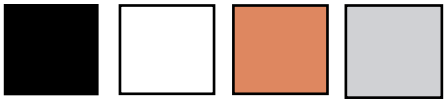

textured black | textured white | flat terracotta | polished aluminum

COLOUR (wire)

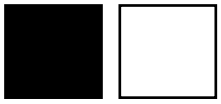

black | white

COLOUR (canopy)

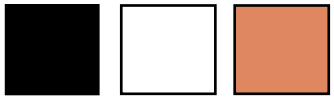

textured black | textured white | flat terracotta

CANOPIES

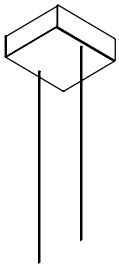

Hutchison 01

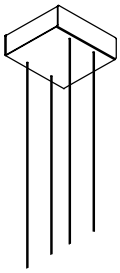

Hutchison 02

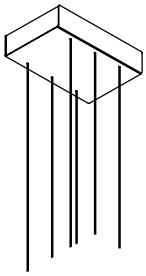

Hutchison 03

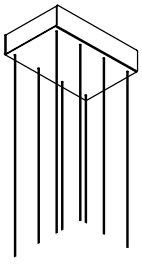

Hutchison 04

lambert&fils

LIGHT SOURCE & DIMMER SPECIFICATIONS

DC LOW VOLTAGE LED BOARD

Replacement parts available through Lambert & Fils

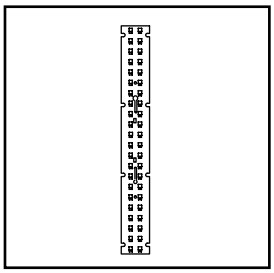

HUTCHISON 01
8 W
Driver input 120-277V
LED board delivered 700 lumen
LED DIM TO WARM
50 000 H
CRI ≥90
2 years warranty
3 SDCM consistency

HUTCHISON 02
16 W
Driver input 120-277V
LED board delivered 1400 lumen
LED DIM TO WARM
50 000 H
CRI ≥90
2 years warranty
3 SDCM consistency

HUTCHISON 03
24 W
Driver input 120-277V
LED board delivered 2100 lumen
LED DIM TO WARM
50 000 H
CRI ≥90
2 years warranty
3 SDCM consistency

HUTCHISON 04
32 W
Driver input 120-277V
LED board delivered 2800 lumen
LED DIM TO WARM
50 000 H
CRI ≥90
2 years warranty
3 SDCM consistency

Replacement parts available through Lambert & Fils