ARTIGIANO

Tavolo/Table

Design Paolo Cappello

TP 70	TP 71	TP 72
200x100	240x100	300x110

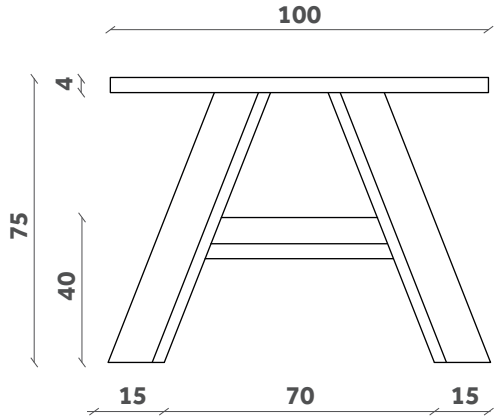

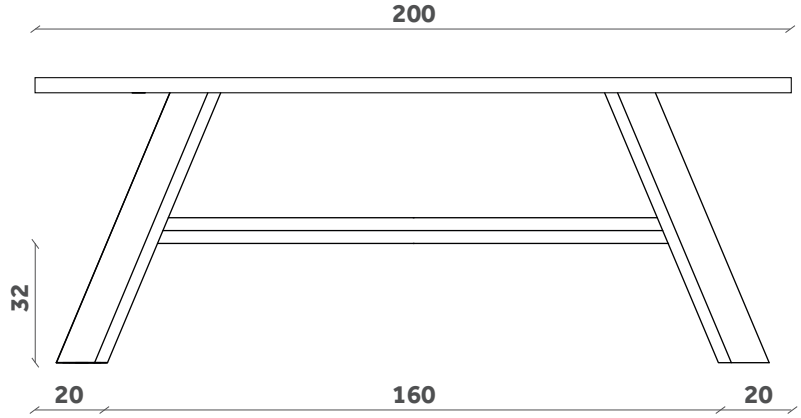

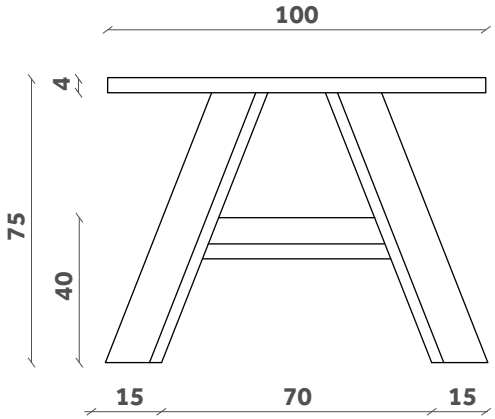

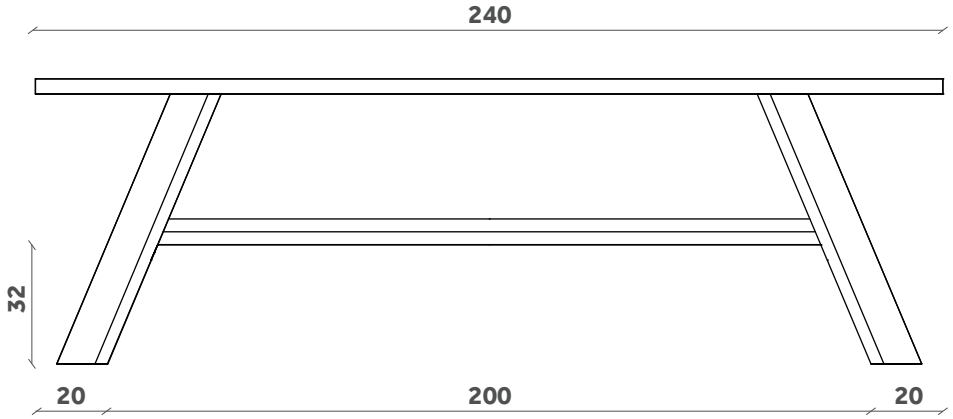

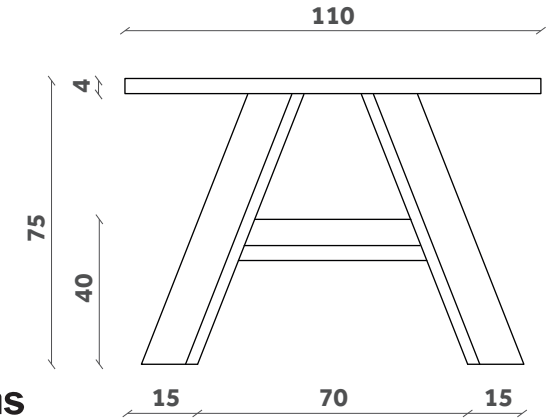

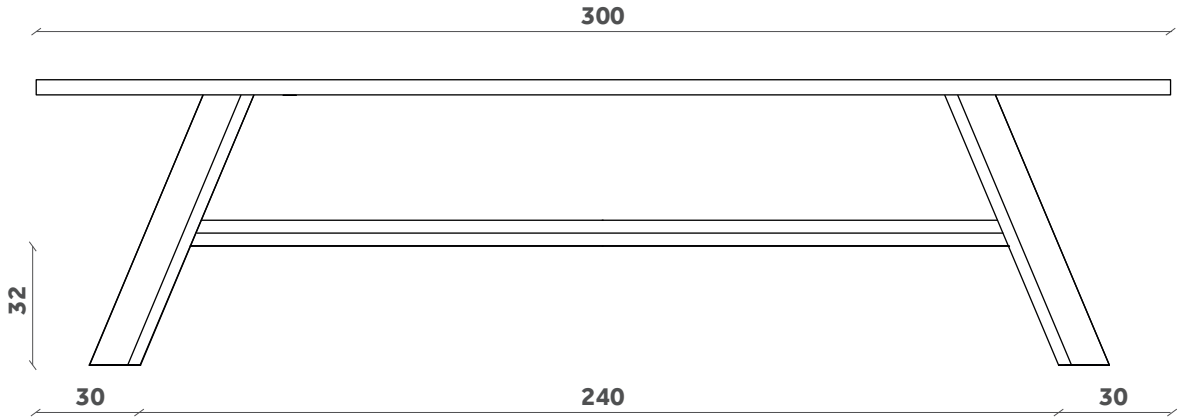

miniforms

FINITURE / *FINISHES*

Base
Base

Legno / *Wood*

Flamed oak

Vintage oak

Canaletto walnut

Heat-treated oak

Piano
Top

Legno / *Wood*

Flamed oak

Vintage oak

Canaletto walnut

Heat-treated oak

Ceramica / *Ceramic*

Calacatta White

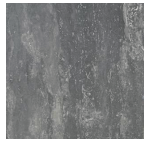
Black Travertino

Fenix **with wooden edges*

White Malè

Efeso Gray

London Gray

Black

miniforms